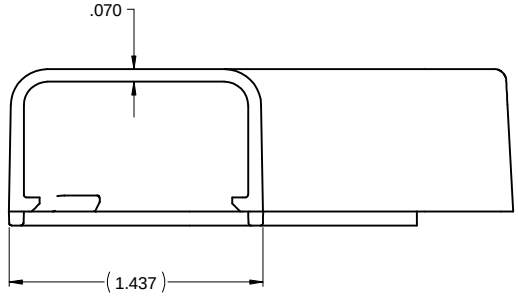

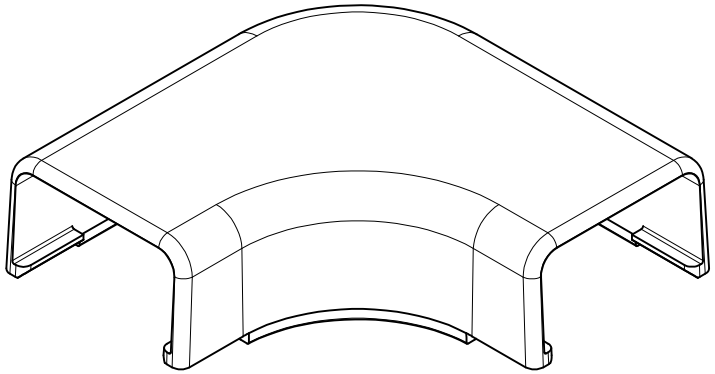

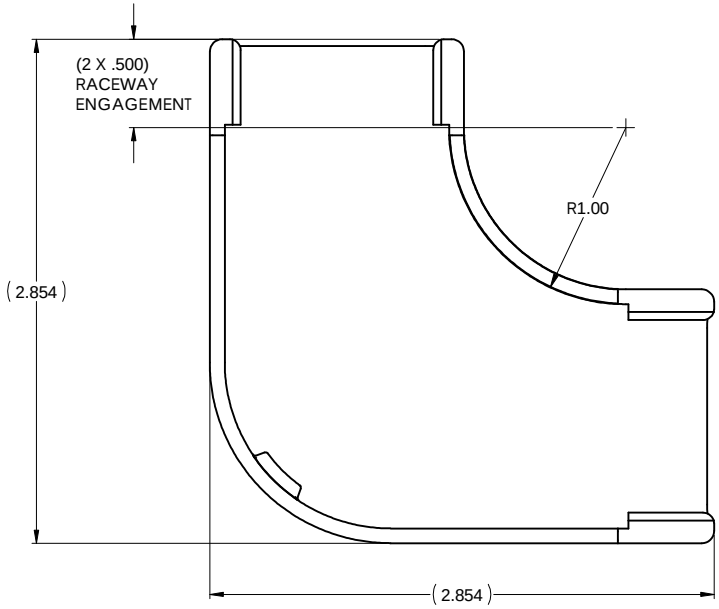

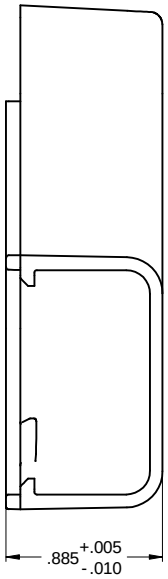

PART NO. DESCRIPTION

TSR2__ -25-1

COLOR:
I = IVORY
FW = OFFICE WHITE
W = WHITE
(FOR OTHER COLORS CONTACT FACTORY)

REDUCED NO SCALE

INVENTORS

HellermannTyton
A SPIRENT Company

ALL PROPRIETARY RIGHTS IN THE SUBJECT MATTER SHOWN ON THIS DRAWING ARE EXCLUSIVE PROPERTY OF HELLERMANNTYTON

name	date	city, state

NOTES

1. THIS PART MATES WITH (2) TSR2 RACEWAYS.

REVISION

DRAWING
level 01
by PLN
date 07/11/02
ECN # 003262
part level B

DIMENSIONS

TOLERANCES
.XXXX = ±.0005
.XXX = ±.005
.XX = ±.01
.X = ±.03
∠ = ±0.5°
unless otherwise specified
units inches

PART
number TSR2__-25-1
phase PRODUCTION
name TSR2-25-1
1 1/4" INTERNAL COVER
WITH 1" MIN BEND RADIUS
material PVC

DRAWING
format version N C
CAD SW
scale 2:1
computer file number DT3032002CST_01
previous number DT\CST\3032002A
drawn J. STOLZ 03/22/96
checked
approved
type CUSTOMER
sheet 1 of 1
number DT3032002CST